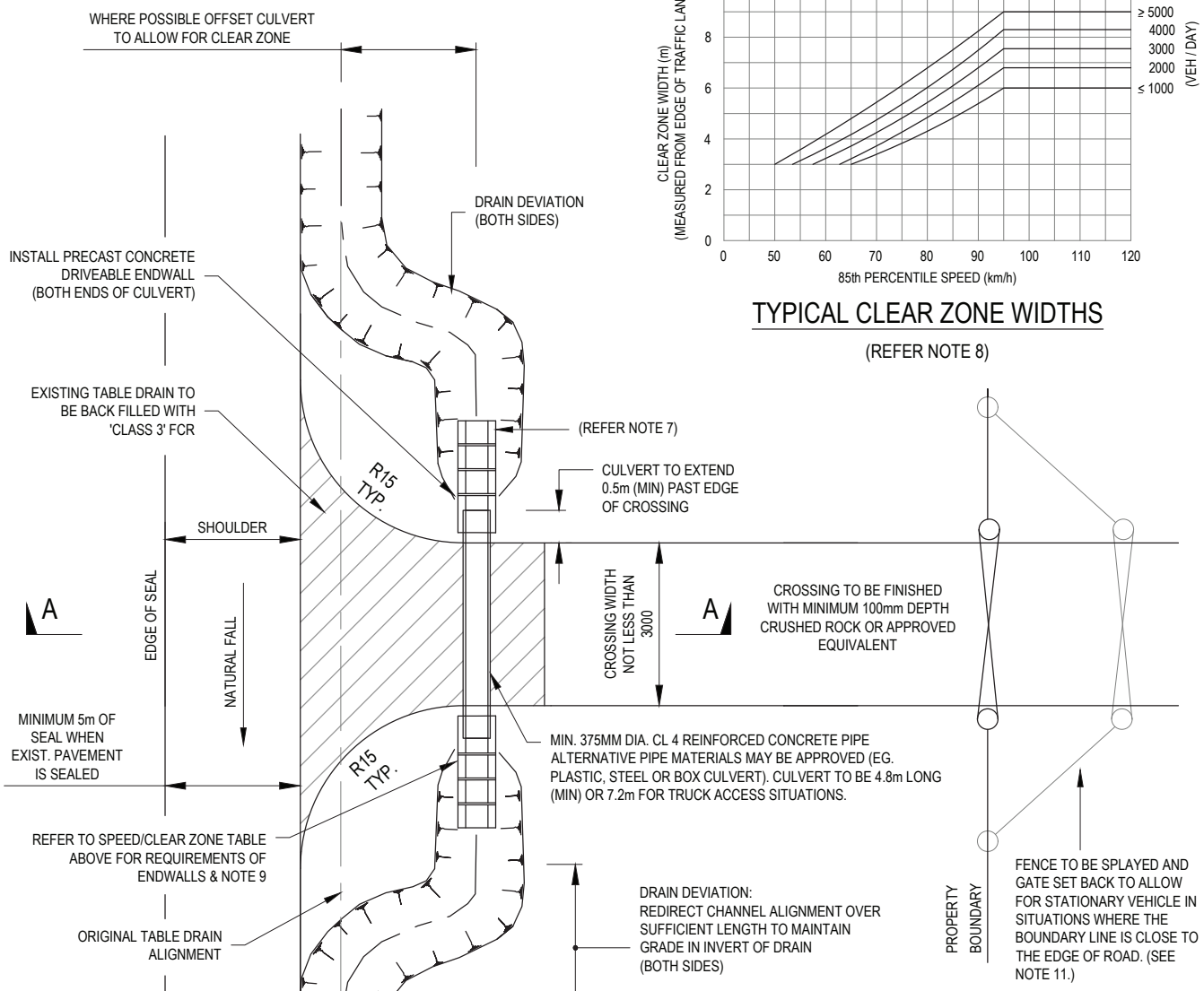

PLAN

TYPICAL CLEAR ZONE WIDTHS

(REFER NOTE 8)

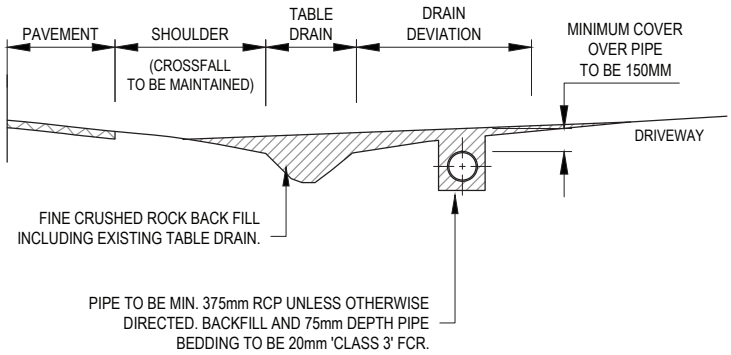

SECTION A-A

NOTES:

1. THIS ARRANGEMENT IS INTENDED FOR RURAL LOW DENSITY RESIDENTIAL& FARMING ACCESS WAYS.
2. COUNCIL RESERVES THE RIGHT TO DIRECT THE USE OF CULVERT END WALL TYPE.
3. THIS IS A TYPICAL CROSSING PLAN. SLIGHT VARIATIONS MAY OCCUR AFTER INSPECTION AND APPROVAL OF LOCATION BY COUNCIL.
4. PRIOR TO THE CONSTRUCTION, THE CROSSING LOCATION SHALL BE APPROVED BY COUNCIL.
5. ALL WORKS TO BE COMPLETED TO THE SATISFACTION OF COUNCIL.
6. MAINTENANCE OF THE CROSSOVER REMAINS THE RESPONSIBILITY OF THE LAND OWNER.
7. INSTALL LOW PROFILE HEAD WALLS OUTSIDE CLEAR ZONE & DRIVEABLE END WALLS WITHIN CLEAR ZONE. NO CULVERT TO BE WITHIN 3m OF EDGE OF SEAL.
8. THE CLEAR ZONE TABLE SHOWN IS A GUIDE ONLY AND FOR FURTHER ACCURATE CLEAR ZONE GUIDELINES REFER TO AUSTROADS 'GUIDE TO ROAD DESIGN - PART 6: ROADSIDE DESIGN, SAFETY AND BARRIERS' TABLE 4.1: 'CLEAR ZONES DISTANCES FROM EDGE OF THROUGH TRAVELLED WAY'
9. TABLE DRAINS ARE NOT TO BE CLOSER THAN 1.0m FROM FENCE LINES OR SERVICES.
10. CROSSING PAVEMENT TO BE SEALED WHERE ABUTS A SEALED ROAD.
11. GATE OFFSET DIMENSIONS:

STANDARD VEHICLE TYPE	MINIMUM GATE OFFSET FROM EDGE OF THROUGH LANE (m)
CAR (5.0m)	8.2
RIGID TRUCK (12.0m)	12.5
SEMI (19.0m)	22
B-DOUBLE (25.0m)	28

ALL MEASUREMENTS IN MILLIMETRES

TYPICAL SWALE DRAIN VEHICLE CROSSING (RURAL ENTRANCE)

LAST UPDATED 29/03/2016

SD 255

Infrastructure Design Manual Standard Drawings

Local Government Infrastructure Design Association

A copy of the Infrastructure Design Manual can be viewed on the Design Manual website www.designmanual.com.au

NOT TO SCALE